Exercise 18: Guide

This lab reinforces the following skills:

- Sketch lines, arcs, circles and fillets.
- Relations.
- Extrusions.
- Fillets and rounds.

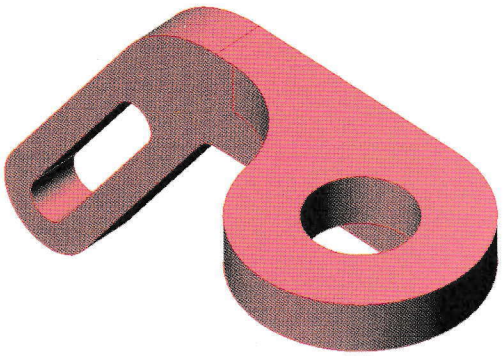

Design Intent

Some aspects of the design intent for this part are:

1. Part is not symmetrical.
2. Large circle is tangent to outer edge.
3. Large circle is coincident with underside brace edge.
4. Plate thicknesses are equal.

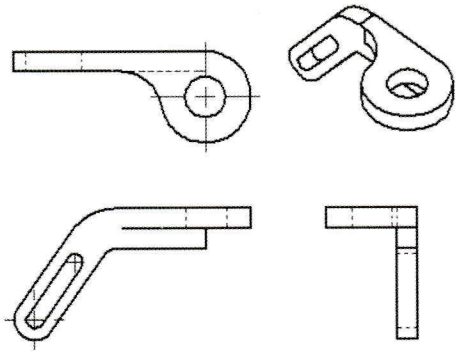

Procedure

Open a new part using the `Part_MM` template.

1 Sketch the profile.
Using the `Front` plane, create the profile.

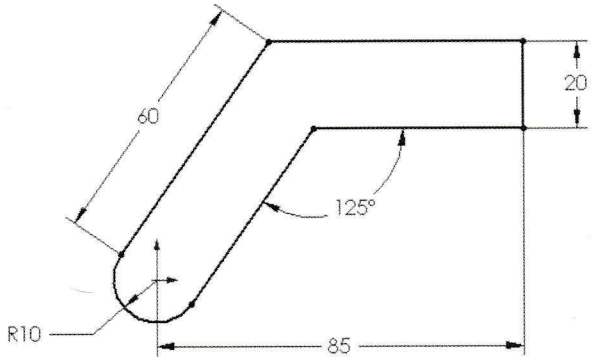

2 Extrusion.
Extrude the sketch **10mm**.

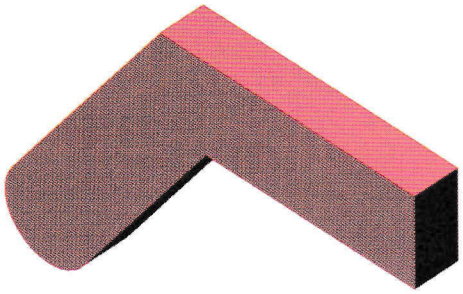

3 **Upper sketch.**
Start a sketch on the top face of the model. The circle is tangent to one edge and coincident to another edge.

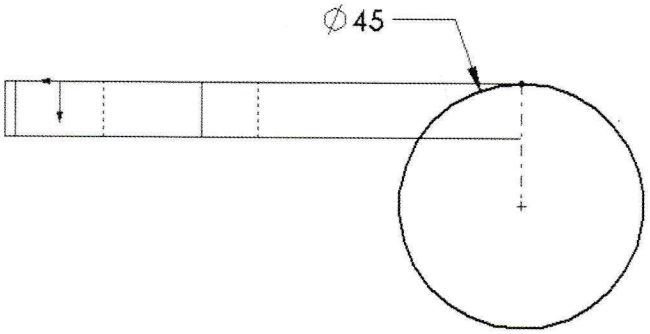

4 **Extrude equal thickness.**
Extrude the circle the same thickness as the first feature.

Use link values to set their depths equal.

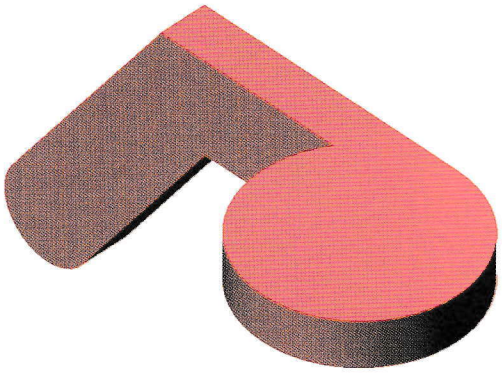

5 **Add two fillets.**
Add two fillets as shown.

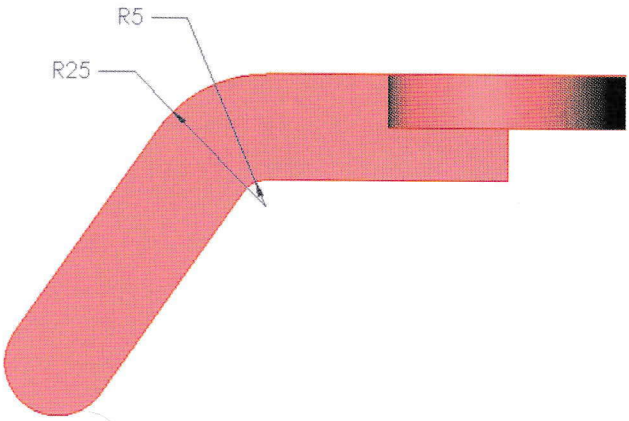

6 **Last fillet.**
Create a third fillet with a **20mm** radius.

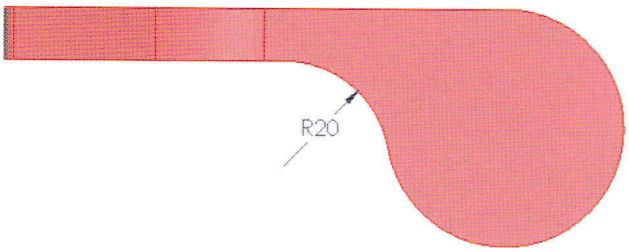

7 Cuts.

Use symmetry with lines and arcs to create a **Through All** cut for the slot shape. Use a circle to create another cut concentric with the model edge.

Note

This sketch requires the use of a **Parallel** relation. Check the **Help, SolidWorks Help Topics** for more information.

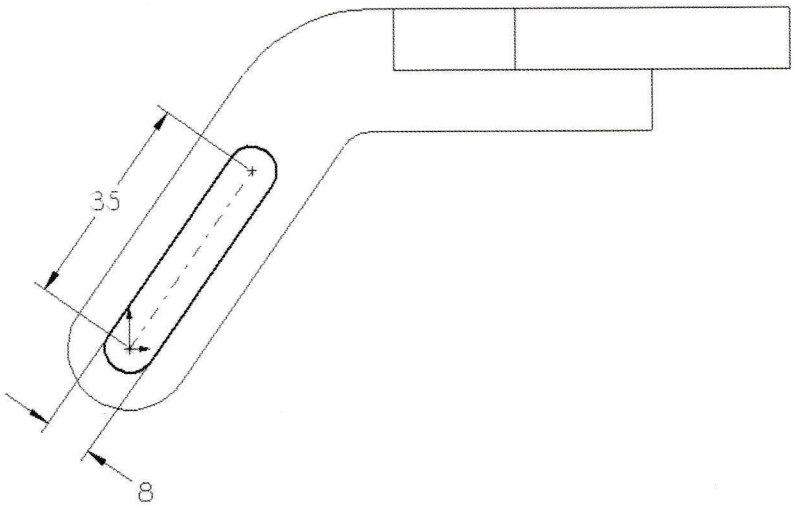

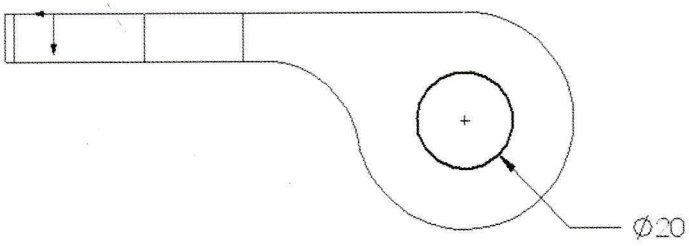

8 Save and close the part.